FOREMOST STANDARD TANK WELD DETAILS (N.T.S.)

SHELL JOINT – VERTICAL	SHELL JOINT – HORIZONTAL	SHELL TO FLOOR	SHELL TO ROOF	ROOF JOINT	FLOOR JOINT

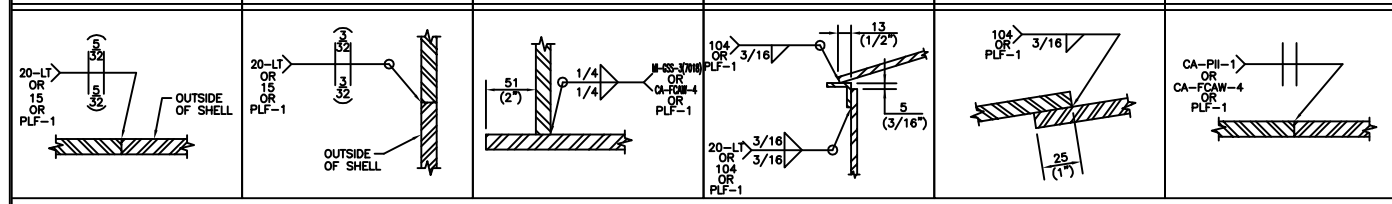

CUSTOMER SPECIFICATIONS

DESIGN CODE: API–650
SERIAL NO: 030970–1 TO 9
DESIGN PRESSURE: 3.45 Kpag(8 oz.) PRESS. / 0.58 oz. VAC.
DESIGN TEMPERATURE: –40°C(–40°F) TO 93°C(200°F)
OPERATING TEMPERATURE:
SERVICE: DIESEL/GASOLINE
OPERATING LEVEL:
CORROSION ALLOWANCE: NONE
OTHER:

FINISHING

INTERNAL: NONE

EXTERNAL: SANDBLAST SHELL & ROOF TO SSPC–SP6 & APPLY ONE TOP COAT OF ENDURA WHITE 120 PAINT.

TESTING:
–AIR TEST ROOF & SHELL AS PER API–12F TO 12 oz.,
–VACUUM BOX LEAK TEST FLOOR TO 3.0 psig.

INSULATION: NONE

LADDERS & PLATFORM: APPLY BLACK ELASTOMERIC SEALER.

NOZZLE SCHEDULE

MK	NO	SIZE	SCH	RATE	TYPE	PROJECTION INT.	PROJECTION EXT.	REPAD YES	REPAD NO	DESCRIPTION
N1	1	114 / 4"	XS	CLASS 150	RFSO	25 / 1"	203 / 8"		✓	INLET (IN VAULT)
N2	1	114 / 4"	XS	CLASS 150	RFSO	25 / 1"	203 / 8"		✓	OUTLET (IN VAULT)
N3	1	114 / 4"	STD	CLASS 150	RFSO	25 / 1"	203 / 8"		✓	VENT C/W GOOSENECK
N4	1	114 / 4"	XS	CLASS 150	RFSO	25 / 1"	203 / 8"	✓		DRAIN
N5	1	114 / 4"	XS	CLASS 150	RFSO	25 / 1"	203 / 8"	✓		SPARE
C1	1	38 / 1 1/2"	–	3000#	FULL CPLG	HALF	HALF		✓	LEVEL INDICATOR C/W GAUGEBOARD
C2	1	51 / 2"	–	3000#	HALF CPLG	–	FULL		✓	LEVEL SWITCH C/W MURPHY LS200 ELECTRIC LEVEL SWITCH
C3	1	51 / 2"	–	3000#	HALF CPLG	–	FULL		✓	HIGH LEVEL ALARM CONN. (IN VAULT)
C4 a,b	2	32 / 1 1/4"	–	3000#	FULL CPLG	HALF	HALF		✓	FLOAT GUIDE WIRES
T1	1	219 / 8"	STD	–	FAB'D	25 / 1"	152 / 6"		✓	THIEF HATCH NOZZLE c/w ENVIRO 660 SET AT 8 oz. PRESS. / 0.4 oz. VAC.
M1	1	762 / 30"	–	API 650	FAB'D	25 / 1"	203 / 8"	✓		SHELL MANWAY C/W COVER

MATERIAL LIST

MATERIAL REQUIREMENTS

M (MTR'S): MTR'S REQUIRED AND MATERIAL IDENTIFIED AS PER Q.C. MANUAL
I (IMPACT TESTING): NONE
C (CHEMISTRY): NONE

MK	QTY	PART NO.	DESCRIPTION	REF. DWG.	MATERIAL	WT	MAT REQ
1	1	2954	FLOOR PLATE 1/4" THK. x 15'–7 1/2" DIA.	–	G40.21–38W	1956	M
2	2	6996	ROOF PLATE (HALF) 3/16" THK. x 15'–9 1/8" FLAT DIA.	–	G40.21–38W	1496	M
3	1	2959	SHELL PLATE 1/4" THK. x 8'–0" x 47'–11 11/16" LG.	–	G40.21–38W	3919	M
4	3	2939	SHELL PLATE 3/16" THK. x 8'–0" x 47'–11 1/2" LG.	–	G40.21–38W	8817	M
5	1	1784	RUNAROUND ANGLE 2" x 2" x 3/16" x 48'–6 3/8" LG.	–	G40.21–44W	118	–
6	1 SET	–	NOZZLE DETAILS	T–030970–D102	–	500	–
7	4	1494	TANK HAULING PAD	–	–	136	–
8	2	4275	LIFTING LUG 1/2" THK.	–	–	42	–
9	1	1473	NAMEPLATE	–	–	1	–
10	1	2896	NAMEPLATE BRACKET	–	–	5	–
11	1	–	SHELL MANWAY – 30" API–650 C/W COVER	T–030970–B103	–	711	–
12	1	2769	THIEF HATCH NOZZLE C/W ENARDO 660	–	–	29	–
13	1	4272	GROUNDING LUG	–	–	1	–
14	4	2533	TANK ROOF SAFETY HARNESS LUG	–	–	2	–
15	1	–	LADDER C/W CAGE (2 STAGES)	T–030970–D109	–	778	–
16	1	–	INTERMEDIATE PLATFORM 3'–0" x 3'–0" C/W SAFETY GATE	T–030970–B108	–	338	–
17	1	–	ENVIRO–VAULT WALL/ROOF 6'–0" x 6'–0"	T–030970–A107	–	848	–
18	1	–	ENVIRO–VAULT DOOR DETAIL	T–030970–C106	–	73	–
19	1	–	LEVEL INDICATOR ASSEMBLY c/w METRIC BOARD, FLOAT, GUIDE WIRES, FLOOR CLIPS, CABLE TIGHTENERS & MISC. HARDWARE	T–030970–B105	–	107	–
20	1	4276	TAILING LUG C/W REPAD (LIGHT ASS'Y)	–	–	27	–
21	6	–	ANCHOR CHAIR	T–030970–A104	–	228	–
22	1	–	MURPHY LS200 ELECTRIC LEVEL SWITCH	–	–	6	–
					SUBTOTAL	20138	
					x 1.06		
					TOTAL (lbs.)	21346	

*NOTE: WEIGHTS SHOWN ARE APPROXIMATE
FINAL WEIGHTS WILL BE KNOWN ONCE
ALL DRAWINGS ARE COMPLETE.

NOTES:

1. ALL DIMENSIONS ARE IN S.I. AND IMPERIAL UNITS. DIMENSIONS IN BRACKETS ARE IMPERIAL HARD CONVERSIONS FOR SHOP REFERENCE ONLY.
2. ALL NOZZLE PROJECTIONS GIVEN ARE ALONG THE NOZZLE CENTERLINES EXCEPT FOR THE 25(1") INTERNAL PROJECTION WHICH IS AT THE SHORT SIDE.
3. ALL FLANGE RATINGS TO BE ASME B16.5 – 2009.
4. FLANGE AND BOLT HOLES TO STRADDLE PRINCIPAL ℄'S OF TANK.
5. TANK FABRICATOR IS NOT RESPONSIBLE FOR ENVIRO–VAULT DESIGN, BUT ARE RESPONSIBLE FOR ITS INTEGRATION INTO THE TANK. THE ENTIRE TANK, INCLUDING THE ENVIRO–VAULT, IS TO MEET THE DESIGN PRESSURE/VACUUM CONDITIONS SPECIFIED ABOVE.
6. DRILL 1/4" TELLTALE HOLE IN REINFORCING PADS.
7. INSPECTION LEVEL 1.

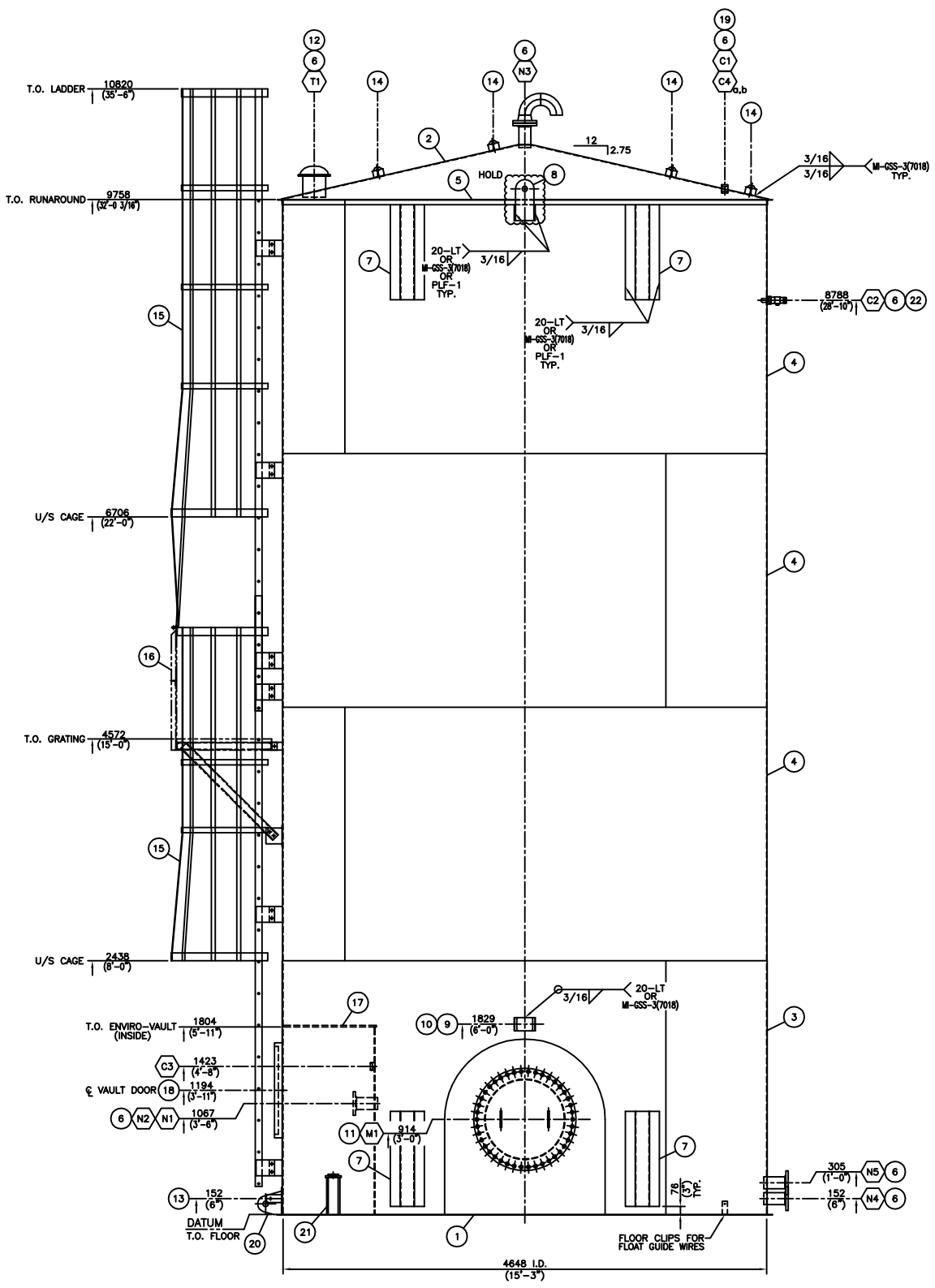

ELEVATION

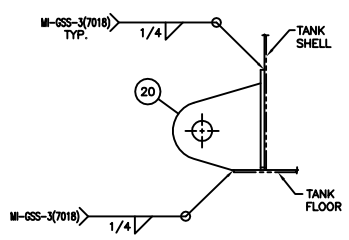

MK#20 INSTALL DETAIL
SCALE: 1:10

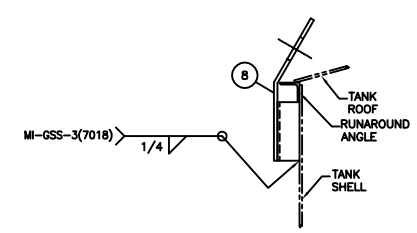

MK#8 INSTALL DETAIL
SCALE: 1:10

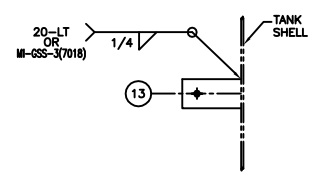

MK#13 INSTALL DETAIL
SCALE: 1:10

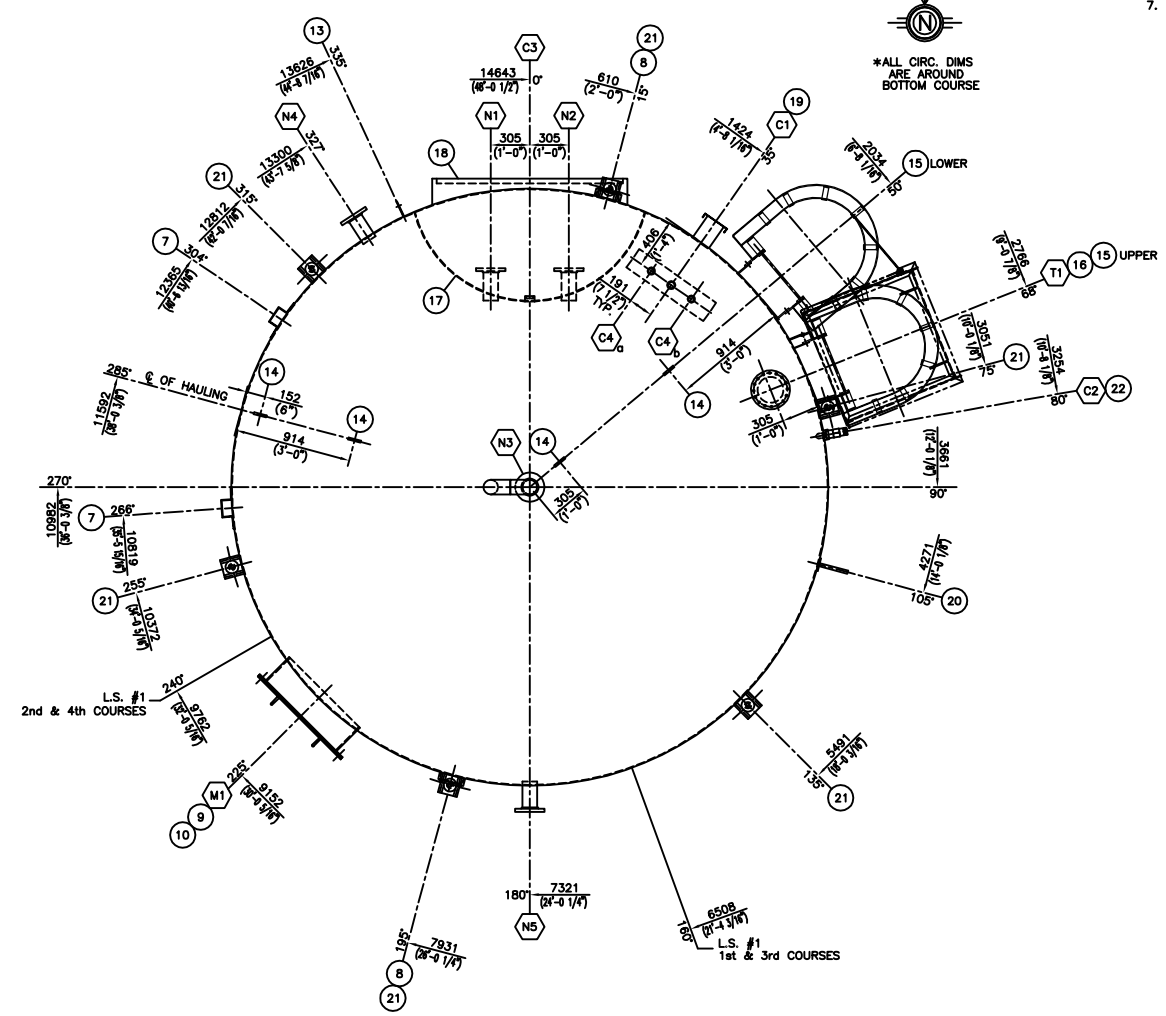

ORIENTATION

NOTE:
DIESEL AND GASOLINE STORAGE TANKS NEED TO MEET THE REQUIREMENTS OF THE B.C. FIRE CODE AS INTERPRETED BY THE LOCAL FIRE MARSHAL IN WHICHEVER JURISDICTION THE TANK RESIDES. IT IS POSSIBLE THAT THESE TANKS WILL NOT MEET THESE REQUIREMENTS. IT IS THE CLIENT'S RESPONSIBILITY TO CONSULT WITH THE LOCAL FIRE MARSHAL(S) TO CONFIRM ACCEPTANCE PRIOR TO CONSTRUCTION. FLOW RATES ARE REQUIRED FOR API2000 CALCULATIONS.

CUSTOMER TO CONFIRM ELEVATION & ORIENTATION OF ALL NOZZLES

NO.	DATE (d/m/y)	REVISIONS	BY	APPD
2	03/10/13	ISSUED FOR CONSTRUCTION	VDT	
1	25/09/13	ISSUED FOR CUSTOMER APPROVAL	VDT	JK

THIS DRAWING IS THE PROPERTY OF FOREMOST UNIVERSAL LP AND IS TO BE USED ONLY IN CONJUNCTION WITH PERFORMANCE OF WORK BY FOREMOST UNIVERSAL LP. REPRODUCTION OR USE OF IN WHOLE OR IN PART FOR ANY OTHER PURPOSE IS EXPRESSLY FORBIDDEN.

FOREMOST

CLIENT
NEXEN ENERGY ULC
LIARD NORTH TANK FARM
P.O.# NXC–107268

DWG TITLE
1000 BBL DIESEL/GASOLINE STORAGE TANK
GENERAL ARRANGEMENT

NO. REQ'D	VOLUME	SIZE	WO NO.	LEG NO.
9	159 CUBIC METERS (1000 bbl)	4648mm I.D. x 9754mm HIGH (15'–3" I.D. x 32'–0" HIGH)	030970	
SCALE 1:30	DWN BY V. TUGUINAY	DWG NO. T–030970–D101	SHEET NO. 1 OF 1	REV. NO. 0
DATE (d/m/y) 24/09/13	CHKD / APPD			

0–SHOP TANK SINGLE GA_REV.1

\PROJECTS\WO–030970\T–030970–D101