MOTOR:	COMPRESSOR:	1st CYLINDER 16.5":	2nd CYLINDER 11.5":	COOLER:	1st SCRUBBER:	2nd SCRUBBER:	1st CYLINDER BOTTLES:	2nd CYLINDER BOTTLES:	1st STG. DISCH. PSV:	2nd STG. DISCH. PSV:	CONTROL PANEL:
RELIANCE 800HP	DRESSER RAND DF6XH2	A16GH-2	G12201	AIR-X 108 EF	"A": 636993	"A": 636994	A: 636969, 636977	A: 569497, 636970	FARRIS 26JA10-120	FARRIS 26GA12-120	SPARTAN REM Vue500
S/N: FC7382M2	S/N: A-19575	MAWP = 275 PSIG	MAWP = 675 PSIG	S/N: 138347B	S/N: 13-247	S/N: 13-240	S/N: 13-248, 13-249	S/N: 13-251, 13-252	SET @ 215 PSIG	SET @ 645 PSIG	
		S/N: A-14084	S/N: A-16256		CRN: W4105.213	CRN: W4107.213	CRN: W4248.213, W4247.213	CRN: W4057.213, W4103.213			S/N: RS-34103-AA

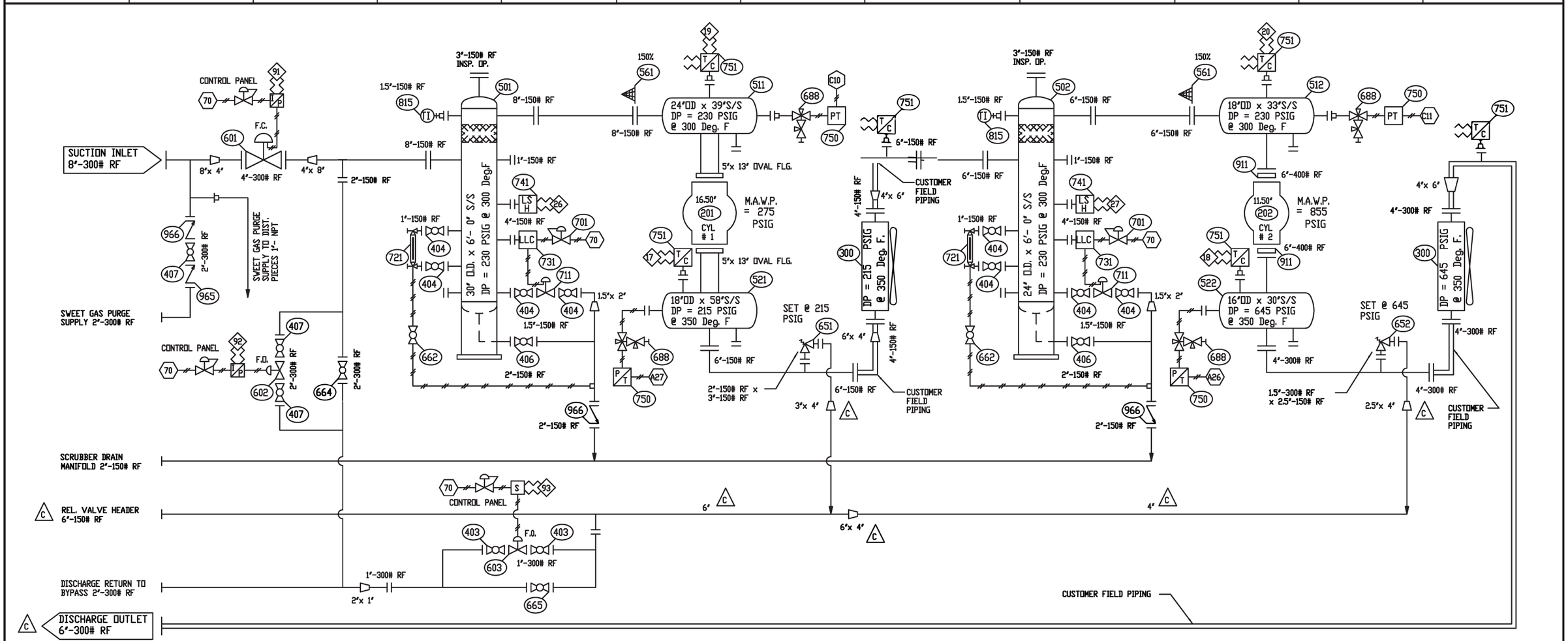

PNEUMATIC TERMINATIONS

- C10 SUCTION PRESSURE STG. ONE
- C11 SUCTION PRESSURE STG. TWO
- A27 DISCH. PRESSURE STG. ONE
- A26 DISCH. PRESSURE STG. TWO
- 70 INSTRUMENT GAS
- 91 SUCTION CONTROL VALVE SIGNAL
- 92 AUTOBYPASS SIGNAL
- 93 AUTOBLOWDOWN VALVE SIGNAL

ELECTRIC TERMINATIONS

- 26 HIGH LIQUID LEVEL FIRST SCRUBBER
- 27 HIGH LIQUID LEVEL SECOND SCRUBBER
- 12 VIBRATION COOLER
- 8 VIBRATION COMPRESSOR
- 9 VIBRATION MOTOR
- 6 HIGH TEMPERATURE COMPRESSOR OIL
- 01 LOW PRESSURE COMP. OIL
- 15 LOW LEVEL COMP. OIL
- 13 LUBRICATOR NO FLOW SWITCH
- 17 DISCHARGE TEMP. CYLINDER #1
- 18 DISCHARGE TEMP. CYLINDER #2
- 19 SUCTION TEMP. CYLINDER #1
- 20 SUCTION TEMP. CYLINDER #2

GENERAL NOTES

1. INSTRUMENTATION

- TEMP. & PRESS. GAUGES SHALL BE DUAL SCALE
- INSTRUMENT MEDIUM TO CLEAN DRY FUEL GAS
- CONTROL PANEL POWERED BY - 24 V DC
- PROCESS TUBING TO BE 3/8" OD x .035" w.t. 316L SS FITTINGS TO BE 316L SS c/w 316L SS FERRULES
- INSTRUMENT TUBING TO BE 1/4" OD x .035" w.t. 316L SS FITTINGS TO BE 316L SS c/w 316L SS FERRULES
- LUBE OIL TUBING TO BE OD AS NOTED x .035" 316L SS FITTINGS TO BE 316L SS c/w 316L SS FERRULES
- TUBING RUNS IN TRAFFIC AREAS SHALL BE PROTECTED WITH REMOVABLE COVER
- ON SKID WIRING BY MID WESTERN / SELECT

2. PROCESS PIPING

- CONSTRUCTED IN ACCORDANCE WITH ANSI B31.3 & NACE MR 0175
- HYDROSTATIC TESTED TO 1.5 x DESIGN PRESS. @ AMBIENT
- CORROSION ALLOWANCE = 0.125 INCHES
- RADIOGRAPHIC EXAMINATION = 100% X-RAY
- STRESS RELIEVED - 1150 Deg.F / ONE HOUR
- PIPING MATERIAL ORDERED WITH RESTRICTED CHEMISTRY
- EXTERNALLY POWER CLEANED TO SSPC SP3 & PAINTED
- INTERNALLY FLUSHED & OILED
- ALL FLANGED RELIEF VALVES SHALL BE GUSSETED OR BRACED BACK TO PIPING OR VESSEL
- PIPING TO BE ANCHORED TO STRUCTURAL MEMBERS WITH STANDARD STRAP TYPE HEAVY DUTY CLAMPS (NO "U-BOLT" TYPE)
- PROCESS SCREWED CONNECTIONS SHALL BE 6000# FS TOL

3. PROCESS PRESSURE VESSELS

- CONSTRUCTED IN ACCORDANCE WITH ASME SECTION VIII, DIV. 1
- HYDROSTATIC TESTED TO 1.3 x DESIGN PRESS. @ AMBIENT
- CORROSION ALLOWANCE = 0.125 INCHES
- RADIOGRAPHIC EXAMINATION = FULL PER UW 11a (100%)
- STRESS RELIEVED - 1150 Deg.F / ONE HOUR
- VESSEL MATERIAL ORDERED WITH RESTRICTED CHEMISTRY
- EXTERNALLY PICKLED & OILED (SUCTION BOTTLES ONLY) / SANDBLASTED SSPC SP6
- INTERNALLY PICKLED & OILED (SUCTION BOTTLES ONLY) / SANDBALSTED SSPC SP6
- ALL VESSEL CONNECTIONS SHALL BE FLANGED

4. CUSTOMER NOTES

- COLOR OF PACKAGE: - GRATING BLACK
  - UNIT BATTLESHIP GREY
  -
  - EXTERIOR, ALUMINIUM INTERIOR

SOUR GAS SERVICE 220,000ppm

	. PO EM Y
SCALE	N.T.S.
CHK'D	

PROCESS and INSTRUMENTATION FLOW DIAGRAM

RELIANCE 800HP / DRESSER RAND DF6XH2 / AIR-X 108AEF

REV	DATE	DESCRIPTION
D	MAR30	FINAL UPDATE
C	FEB 07	PER CAPER MARK-UP
B	JAN 28	SWEET SIDESTREAM REMOVED
A	DEC08	AS PER CAPER MEETING

[redacted]

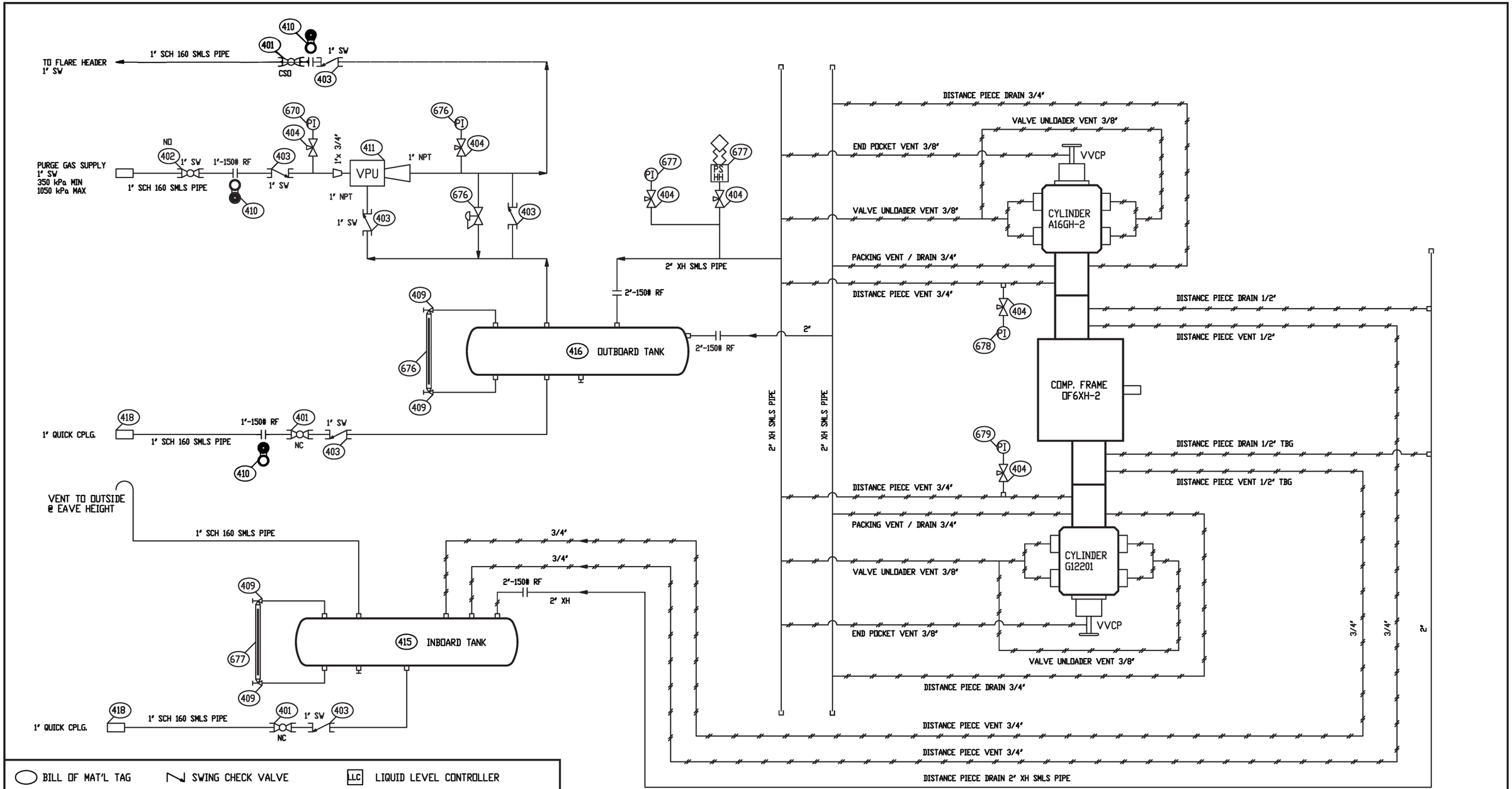

BILL OF MAT'L TAG	SWING CHECK VALVE	LIQUID LEVEL CONTROLLER
PNEUMATIC TAG	PISTON CHECK VALVE	LEVEL SENSOR - HIGH
ELECTRICAL TAG	CONTROL VALVE	LEVEL SENSOR - LOW
PRESSURE GAUGE	REGULATOR VALVE	LEVEL SENSOR / SIGHT GLASS
DIFF. PRESS. GAUGE	REGULATOR/RELIEF VALVE	PRESSURE SENSOR - LOW / HIGH
THERMOMETER	THERMOSTAT VALVE	TEMPERATURE SENSOR - HIGH
GAUGE IN PANEL	LUBRICATOR	RESISTANT TEMPERATURE DETECTOR
SENSOR IN PANEL	'Y' - STRAINER	MAIN PROCESS PIPING
GATE VALVE	SIGHT FLOW INDICATOR	SMALL PROCESS / UTILITY PIPING
BALL VALVE	ORIFICE	FUTURE PIPING / PIPING BY OTHERS
GLOBE VALVE	OVERSPEED SENSOR	INST. TUBING AIR, GAS, or OIL
NEEDLE VALVE	VIBRATION SENSOR	CAPILLARY TUBING

REV	DATE	DESCRIPTION

DRAWN	
DATE	MAR31/2014
SCALE	N.T.S.
CHK'D	

DISTANCE PIECE VENT & DRAIN SYSTEM

RELIANCE 800HP / DRESSER RAND DF6XH2 / AIR-X 108AEF

[redacted]

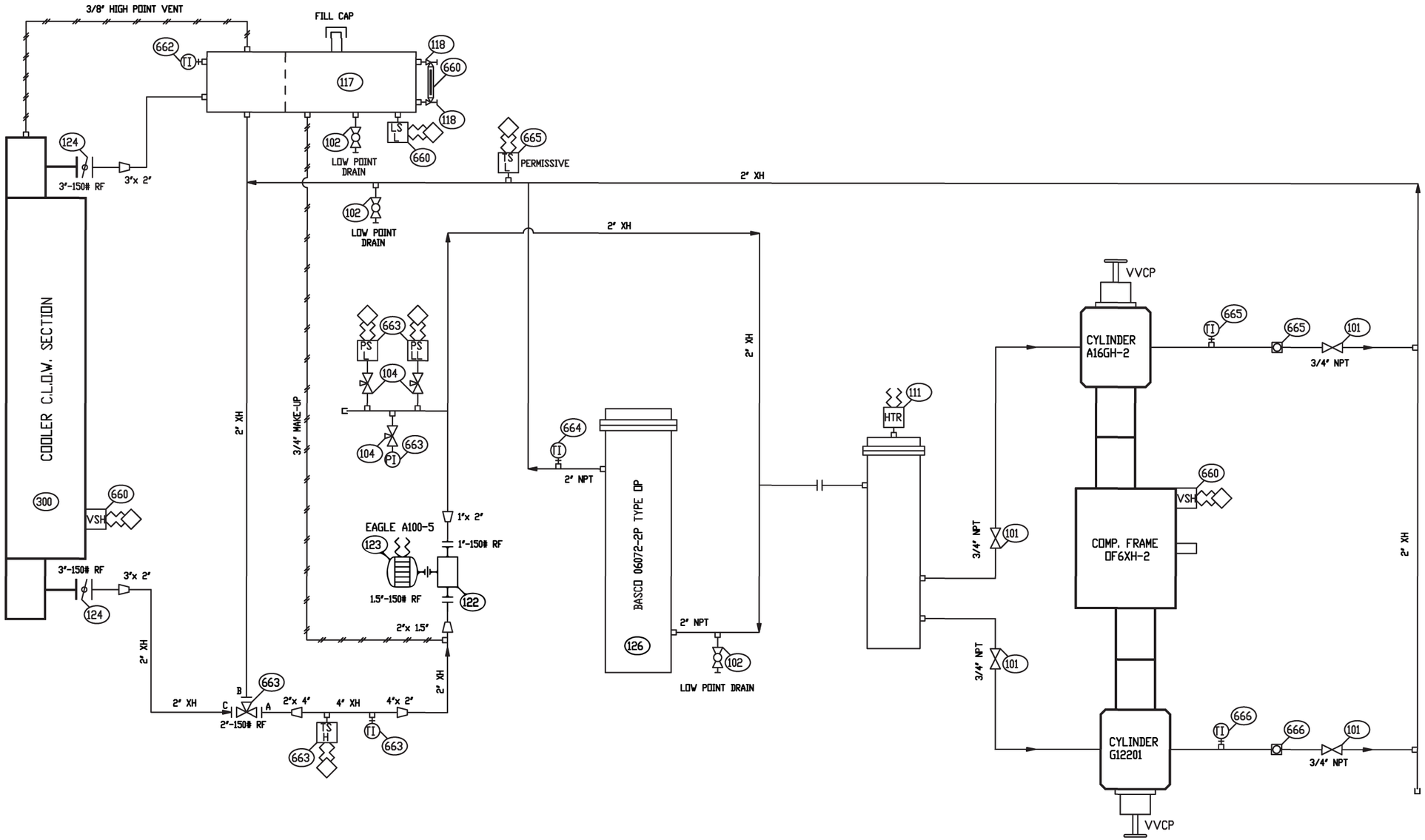

BILL OF MAT'L TAG	SWING CHECK VALVE	LLC	LIQUID LEVEL CONTROLLER
PNEUMATIC TAG	PISTON CHECK VALVE	LS H	LEVEL SENSOR - HIGH
ELECTRICAL TAG	CONTROL VALVE	LS L	LEVEL SENSOR - LOW
PI PRESSURE GAUGE	REGULATOR VALVE		LEVEL SENSOR / SIGHT GLASS
PI DIFF. PRESS. GAUGE	REGULATOR/RELIEF VALVE	PS L	PRESSURE SENSOR - LOW / HIGH
TI THERMOMETER	THERMOSTAT VALVE	TS H	TEMPERATURE SENSOR - HIGH
GAUGE IN PANEL	LUBRICATOR	RTD	RESISTANT TEMPERATURE DETECTOR
SENSOR IN PANEL	'Y' - STRAINER		MAIN PROCESS PIPING
GATE VALVE	SIGHT FLOW INDICATOR		SMALL PROCESS / UTILITY PIPING
BALL VALVE	ORIFICE		FUTURE PIPING / PIPING BY OTHERS
GLOBE VALVE	OS OVERSPEED SENSOR		INST. TUBING AIR, GAS, or OIL
NEEDLE VALVE	VIB VIBRATION SENSOR		CAPILLARY TUBING

DRAWN	
DATE	
SCALE	N.T.S.
CHK'D	

COMPRESSOR COOLING WATER/GLYCOL SYSTEM

RELIANCE 800HP / DRESSER RAND DF6XH2 / AIR-X 108AEF

REV	DATE	DESCRIPTION

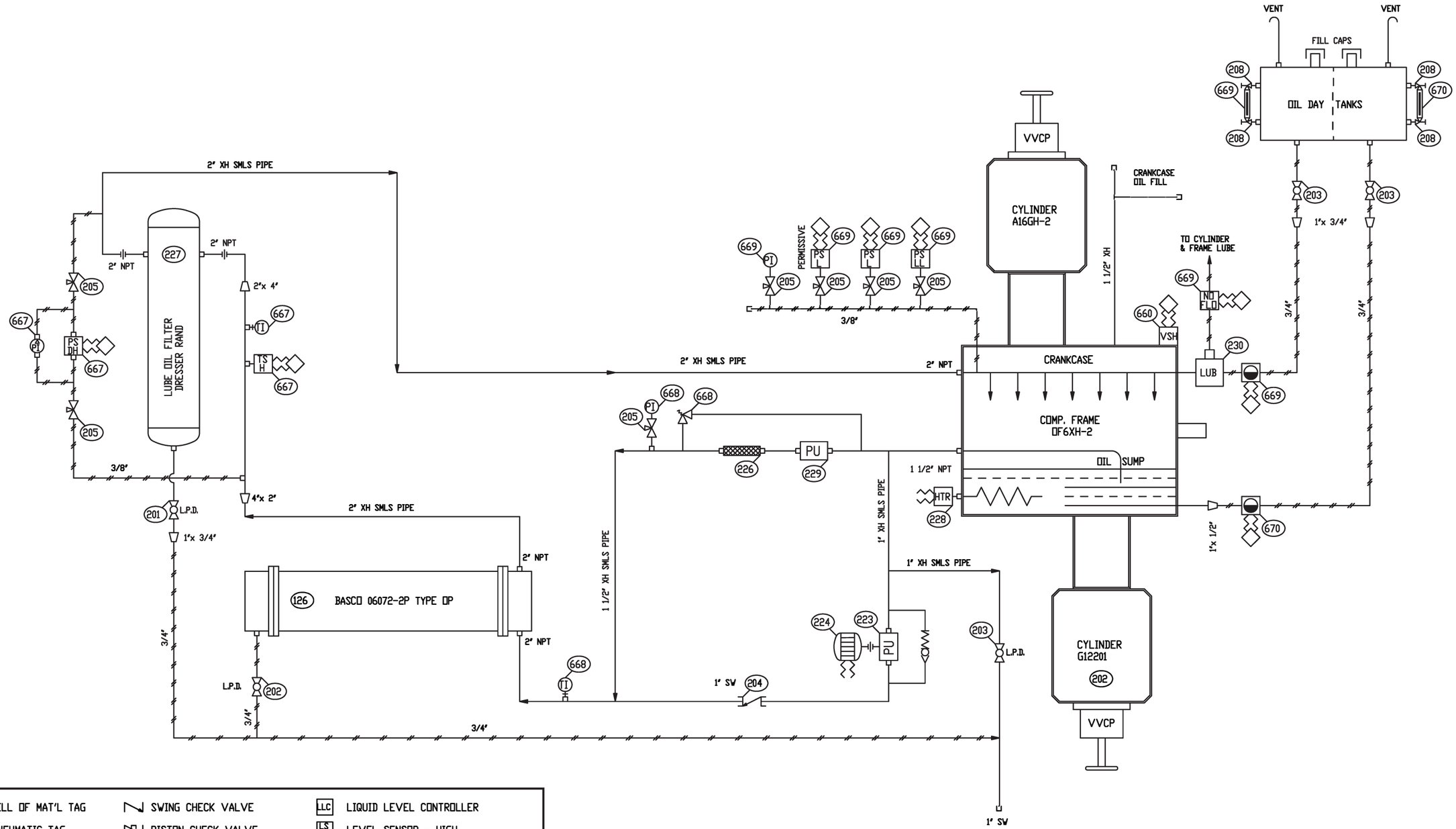

BILL OF MAT'L TAG	SWING CHECK VALVE	LIQUID LEVEL CONTROLLER
PNEUMATIC TAG	PISTON CHECK VALVE	LEVEL SENSOR - HIGH
ELECTRICAL TAG	CONTROL VALVE	LEVEL SENSOR - LOW
PRESSURE GAUGE	REGULATOR VALVE	LEVEL SENSOR / SIGHT GLASS
DIFF. PRESS. GAUGE	REGULATOR/RELIEF VALVE	PRESSURE SENSOR - LOW / HIGH
THERMOMETER	THERMOSTAT VALVE	TEMPERATURE SENSOR - HIGH
GAUGE IN PANEL	LUBRICATOR	RESISTANT TEMPERATURE DETECTOR
SENSOR IN PANEL	"Y" - STRAINER	MAIN PROCESS PIPING
GATE VALVE	SIGHT FLOW INDICATOR	SMALL PROCESS / UTILITY PIPING
BALL VALVE	ORIFICE	FUTURE PIPING / PIPING BY OTHERS
GLOBE VALVE	OVERSPEED SENSOR	INST. TUBING AIR, GAS, or OIL
NEEDLE VALVE	VIBRATION SENSOR	CAPILLARY TUBING

REV	DATE	DESCRIPTION

CHK'D

COMPRESSOR LUBE OIL SCHEMATIC

RELIANCE 800HP / DRESSER RAND DF6XH2 / AIR-X 108AEF

[redacted]