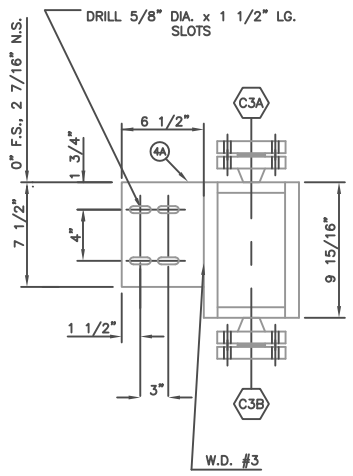

VIEW "D–D"

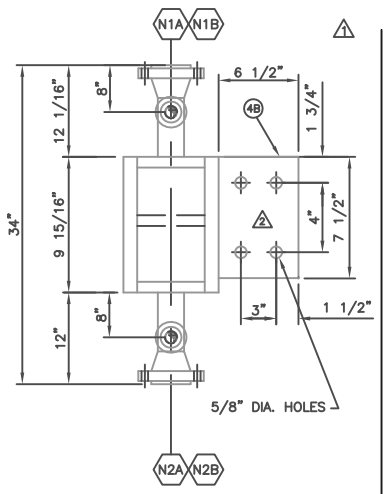

VIEW "C–C"

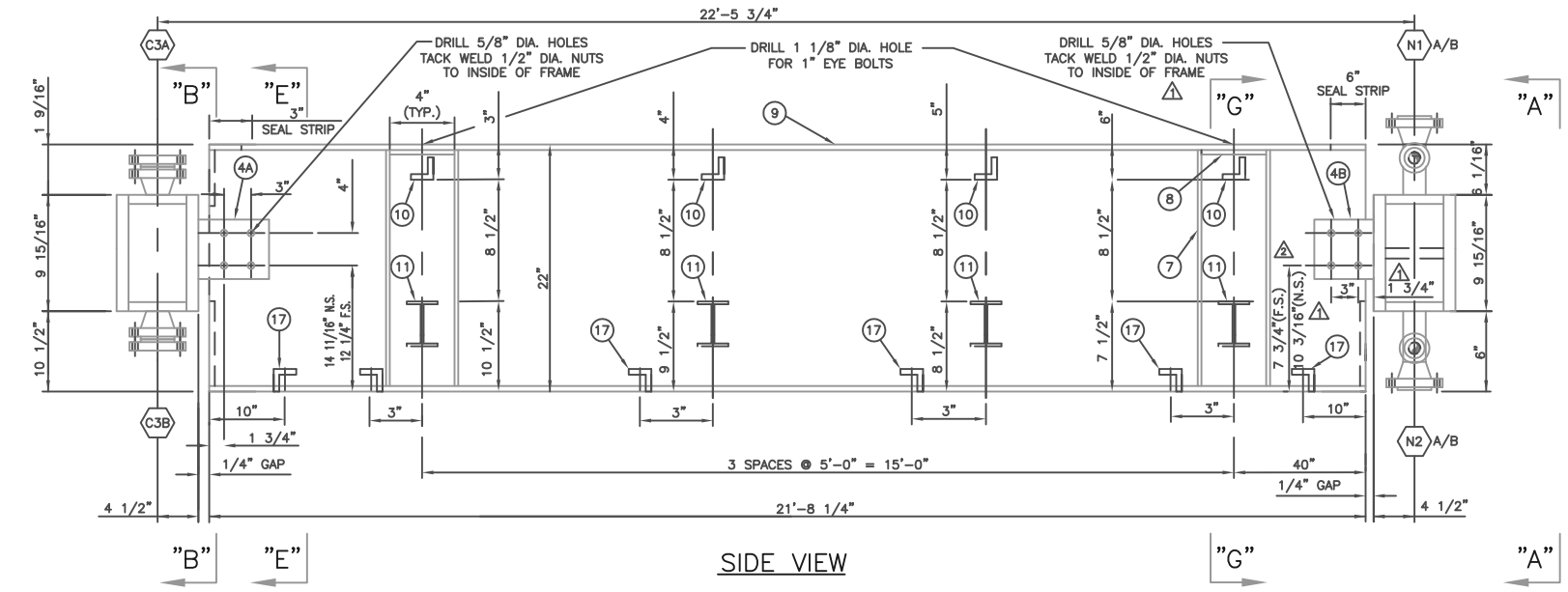

SIDE VIEW

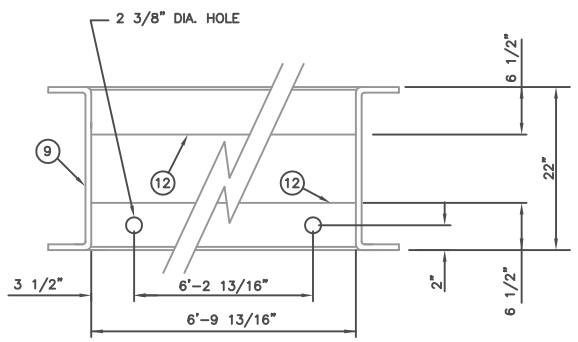

VIEW "G–G"

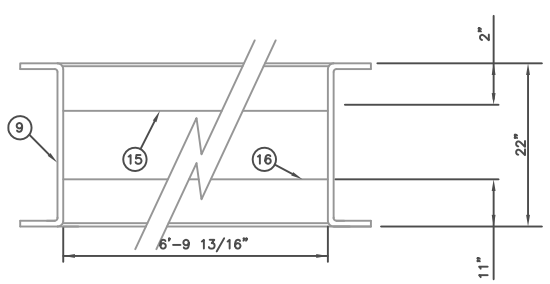

VIEW "E–E"

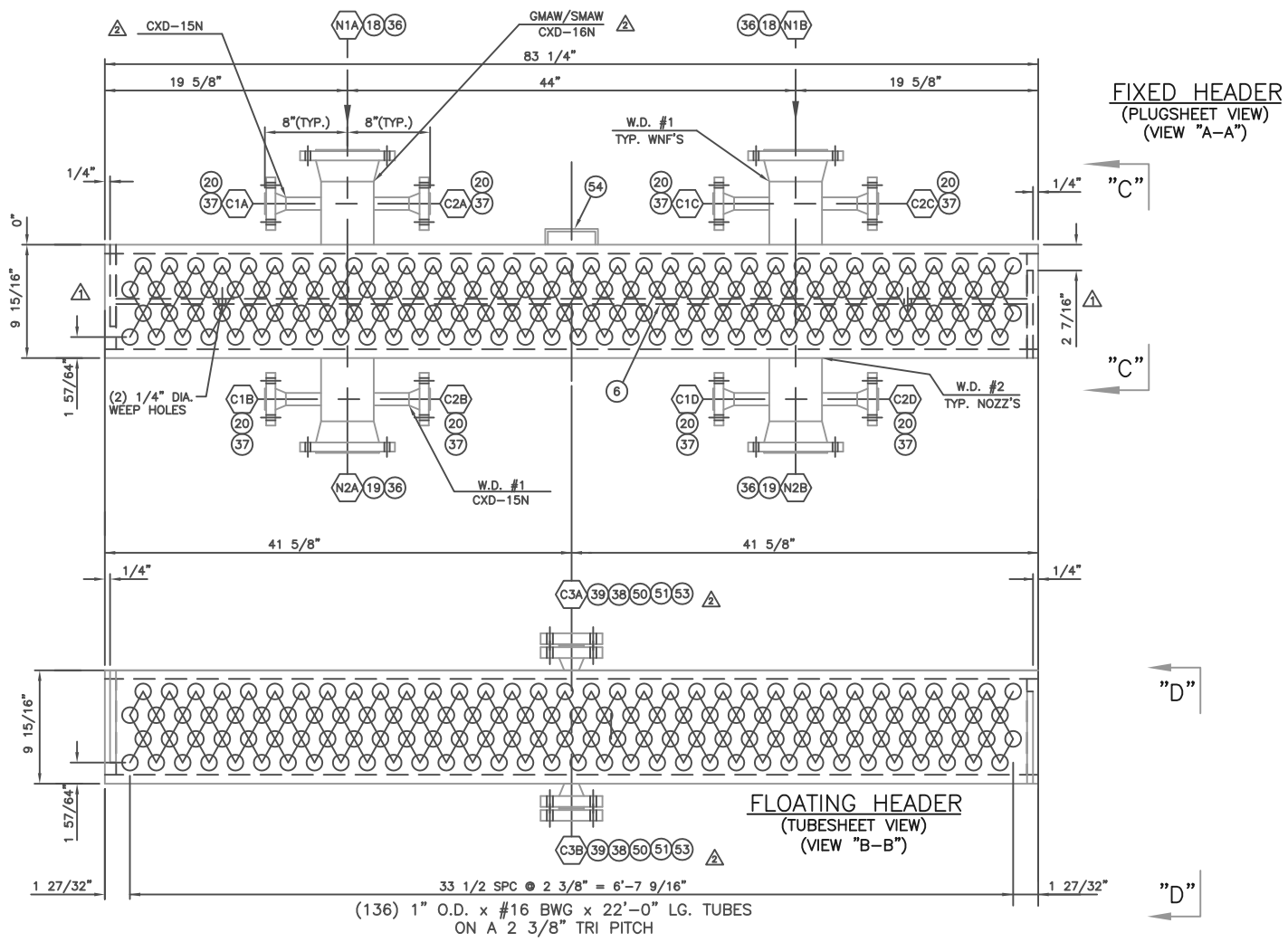

FIXED HEADER
(PLUGSHEET VIEW)
(VIEW "A–A")

BILL OF MATERIAL

ITEM	QTY.	DESCRIPTION		MATERIAL	P.O.#
		PLATE / STRUCTURAL			
1	4	1 1/2" PL. x 9 15/16" x 6'–11 1/4" LG – TUBE & PLUG SHEET	(CIT'D TO –50°F)	SA–240–31803	
2	4	1" PL. x 5 3/4" x 6'–11 1/4" LG. – WRAPPER PLATE	(CIT'D TO –50°F)	SA–240–31803	
3	4	1" PL. x 5 3/4" x 7 11/16" LG. – END PLATE	(CIT'D TO –50°F)	SA–240–31803	
4A/B	4	1/4" PL. x 6 1/2" x 7 1/2" LG. – HEADER CLIPS	(CIT'D TO –50°F)	SA–240–31803	
5					
6	1	1/4" PL. x 6" x 6'–9 1/4" LG. – PASS PLATE (FIXED HEADER)		SA–240–31803	
7	8	3/8" PL. x 2 1/2" x 21 1/2" LG.		G–44W	
8	4	1/4" PL. x 2 1/2" x 4" LG.		G–44W	
9	2	1/4" THK. FORMED CHANNEL x 22" HI C/W 3" FLG'S x 21'–8 1/4" LG. – SIDE FRAME		G–44W	
10	4	L 2" x 2" x 1/4" THK. ANGLE x 6'–9 13/16" LG. – UPPER BRACES		G–44W	
11	4	3" I BEAM @ 5.7 #/ft. x 6'–9 13/16" LG. – MIDDLE BRACE		G–44W	
12	2	#12 GA. THK. FORMED ANGLE 6 1/2" x 6" x 6'–9 13/16" LG.		G–44W	
13					
14					
15	1	#12 GA. THK. FORMED ANGLE 2" x 3" x 6'–9 13/16" LG.		G–44W	
16	1	#12 GA. THK. FORMED ANGLE 11" x 3" x 6'–9 13/16" LG.		G–44W	
17	6	L 1 1/2" x 1 1/2" x 1/4" THK. ANGLE x 6'–9 13/16" LG. – BOTTOM BRACES		G–44W	
		PIPE / FITTINGS			
18	2	6" – SCH. XH (0.432") WELDED PIPE x 7 3/16" LG. – N1A/B	(CIT'D TO –50°F)	SA–790	
19	2	6" – SCH. XH (0.432") WELDED PIPE x 7 1/8" LG. – N2A/B	(CIT'D TO –50°F)	SA–790	
20	8	1" – SCH. 160 (0.250") WELDED PIPE x 2" LG. – C1A–D, C2A–D	(CIT'D TO –50°F)	SA–790	
21					
22					
23					
24					
25					
26					
27					
28					
29					
30					
		TUBES			
31	136	1" O.D. x #16 BWG (A/W) x 22'–0" LG. TUBES c/w 5/8" HIGH x 10 FINS PER INCH L FOOTED ALUMINUM 1100 FINS 2" BARE ENDS		SA–789	
32				–	
33	–	–		–	
34	–	–		–	
35	–	–		–	
		ANSI FLANGES / CPLG'S			
36	4	6" – CLASS 600 RFWN FLG. (SCH XH BORE) – N1A/B, N2A/B	(CIT'D TO –50°F)	SA–182F51(31803)	
2 37	8	1" – CLASS 600 RFWN FLG. (SCH 160 BORE) – C1A–D, C2A–D	(CIT'D TO –50°F)	SA–182F51(31803)	
2 38	2	2" – CLASS 600 RF BLIND FLANGE – C3A/B	(CIT'D TO –50°F)	SA–182F51(31803)	
2 39	2	2" – CLASS 600 RFWN (SCH 160 BORE – C3A/B	(CIT'D TO –50°F)	SA–182F51(31803)	
40					
41	272	1 1/8" O.D. x 1 1/2" LG. HEX SHOULDER PLUG	(CIT'D TO –50°F)	SA–182F51(31803)	
42	–	–		–	
43	–	–		–	
44	–	–		–	
45	–	–		–	
46	–	–		–	
47	–	–		–	
48	–	–		–	
49	–	–		–	
		STUD BOLTS & NUTS			
2 50	16	5/8" DIA. x 3 1/2" LG. STUD BOLTS (ELECTRO PLATE GALVANIZED)		SA–193–B7M	
2 51	32	5/8" O.D. H.HEX NUTS (ELECTRO PLATE GALVANIZED)		SA–194–2HM	
		GASKETS		–	
52	272	1 3/8" O.D. x 1 1/8" I.D. x 1/16" THK. GASKET		UNS31803	
2 53	4	2" CLASS 600 FLEXITALLIC "CG" STYLE GASKET		T–316L	
		NAME PLATES			
54	1	6" x 6" T–BAR TYPE NAME PLATE BRACKET c/w S.S. NAME PLATE		SA–240–31803	

SPECIAL CHEMISTRY NOTES

2 ALL MATERIAL TO MEET NACE–MR–0175

QUANITIY LISTED IS FOR ONE UNIT, ONE UNIT REQUIRED

FIXED HEADER END PLATE | FLOATING HEADER END PLATE | TUBE HOLE DETAIL | PLUG DETAIL

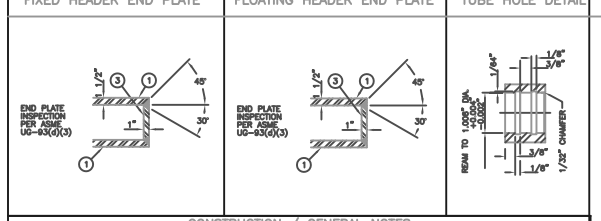

CONSTRUCTION / GENERAL NOTES

NO.	
1	PAINT: NO PAINT ON STAINLESS HEADER BOXES STRUCTURAL: SURFACE PREP: SSPC–SP–6 (COMERCIAL GRADE) PRIME: ONE COAT OF EPOXY CLOVAGUARD 8315 (4.0–6.0 mils DFT) FINISH: ONE COAT OF ALIPHATIC URETHANE, CLOVATHANE 834 (HIGH GLOSS) (2.0–4.0 mils DFT) COLOR: FED–STD–595B FS 15090 (BLUE)
2	EXTERNAL DIMENSIONS, NOZZLE, SUPPORT LOCATIONS AND FABRICATION TOLERANCES SEE TEMA 2007 EDITION, SECTION 2, FIGURES F–1 AND F–2
3	HYDROTEST PRESSURE GOVERNED BY TUBES OPERATING STRESS RATIO

REV.	BY	DESCRIPTION	CALC. PACKAGE REV. LEVEL	REVISED CALCS. REQUIRED	APPROVAL	DATE
2	TR	PAINT, WPS, TAG#, DIM'N	1	NO		JULY 22/10
1	JG	CUST. MARKED–UP DWGS.	1	YES	MS	JULY 8/10
0	JG	ISSUED FOR APPROVAL	0	INITIAL ISSUE	MS	JUN 22/10

REVISION RECORD

FIXED HEADER DETAIL | FLOATING HEADER DETAIL

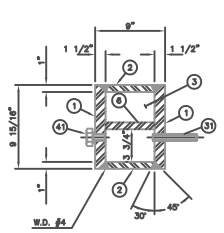

TUBE & PLUG SHEET INSPECTION PER ASME UG–93(d)(3)

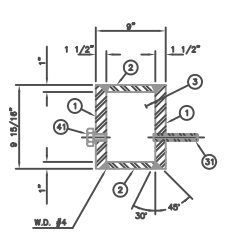

TUBE & PLUG SHEET INSPECTION PER ASME UG–93(d)(3)

WELD DETAILS

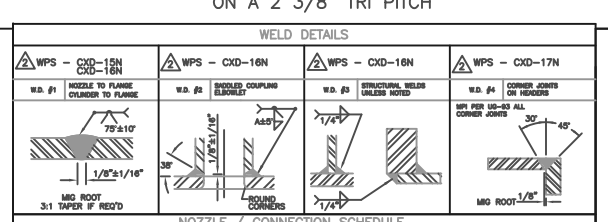

NOZZLE / CONNECTION SCHEDULE

REF.	QTY.	SIZE	CLASS RATING	TYPE	SERVICE	WELD SIZE A	WELD SIZE B	WELD DETAIL #	EXTERNAL PROJECT.	REPAD
N1A/B	2	6"	600#	RFWN	INLET	3/8"	----	1,2	12 1/16"	NO
N2A/B	2	6"	600#	RFWN	OUTLET	3/8"	----	1,2	12"	NO
C1A–D	4	1"	600#	RFWN	T.I.'S	3/8"	----	1,2	----	NO
C2A–D	4	1"	600#	RFWN	P.I.'S	3/8"	----	1,2	----	NO
2 C3A/B	2	2"	600#	RFWN	VENT/DRAIN	3/8"	----	1,2	----	NO

DESIGN DATA

DESIGN CONDITIONS		
DESIGN PRESSURE:	1 1336 PSIG + F.V.	9212 kPa + F.V. 1
DESIGN TEMPERATURE:	1 248 °F	120 °C 1
MIN. DESIGN METAL TEMPERATURE:	–49 °F	–45 °C
RADIOGRAPHY:	100% XR/UT/LPI (WHERE APPLICABLE)	
STRESS RELIEVING:	N/R PER TABLE UHA–32 P–10H	
CORROSION ALLOWANCE:	0"	0 mm
TEST PRESSURE:	1 1749 PSIG	12064 kPa 1
WELDING PROCEDURES:	CXD–15N, CXD–16N, CXD–17N 2	
IMPACT TESTING:	ALL MATERIAL C.I.T.'D TO –50°F PER UG–84 TUBING MATERIAL EXEMPT PER UHA–51 GENERAL NOTE	
MAWP EQUAL TO DESIGN PRESSURE		
NO CORROSION ALLOWANCE APPLICABLE TO TUBING MATERIAL		
CODE: ASME SECTION VIII, DIV. 1, 2007 EDITION, 2009 ADD.	DESIGN: API 661	
REGISTRATION: ALBERTA & BRITISH COLUMBIA, SASK. 2	C.R.N. #:	
	VOLUME: 16.194 CU.FT. / 0.459 CU.M.	
SHIPPING WEIGHT (DRY): 7500 LBS / 3402 KGS	TEST WEIGHT : 8550 LBS / 3878 KGS	
HEATING SURFACE: 793.077 SQ. FT. / 73.679 SQ.M. (BARE)		
REGISTERED QUALITY CONTROL PROCEDURES AQP 1386	REGISTERED WELDING PROCEDURES WP 2380.2	

CALHEX INDUSTRIES LTD.
9515 – 48th STREET S.E.
CALGARY, ALBERTA T2C 2R1

CUSTOMER: TG ENGINEERING INC. FOR DEVON CANADA COPR.

PROJECT: SOUR WELL GAS COOLER (1) 6.88 x 22 x 4RF TAG#: E–5000 2
P.O. # FAC–100189
DEVON KOPMIE PH II WELLSITES

ENGINEERING RECORDS	NAME	DATE
DRAWING BY:	J.GREGORY	JUNE 15/10
CHECKED BY:	D.KLADNIK	JUNE 15/10
APPROVED BY:	M.SOJKA	

SCALE: N.T.S. | L.S.D. NO.: – | DWG. NO.: 10–0562–C | REV.: 2