REVISIONS				
ZONE	REV	DESCRIPTION	DATE	APPROVED

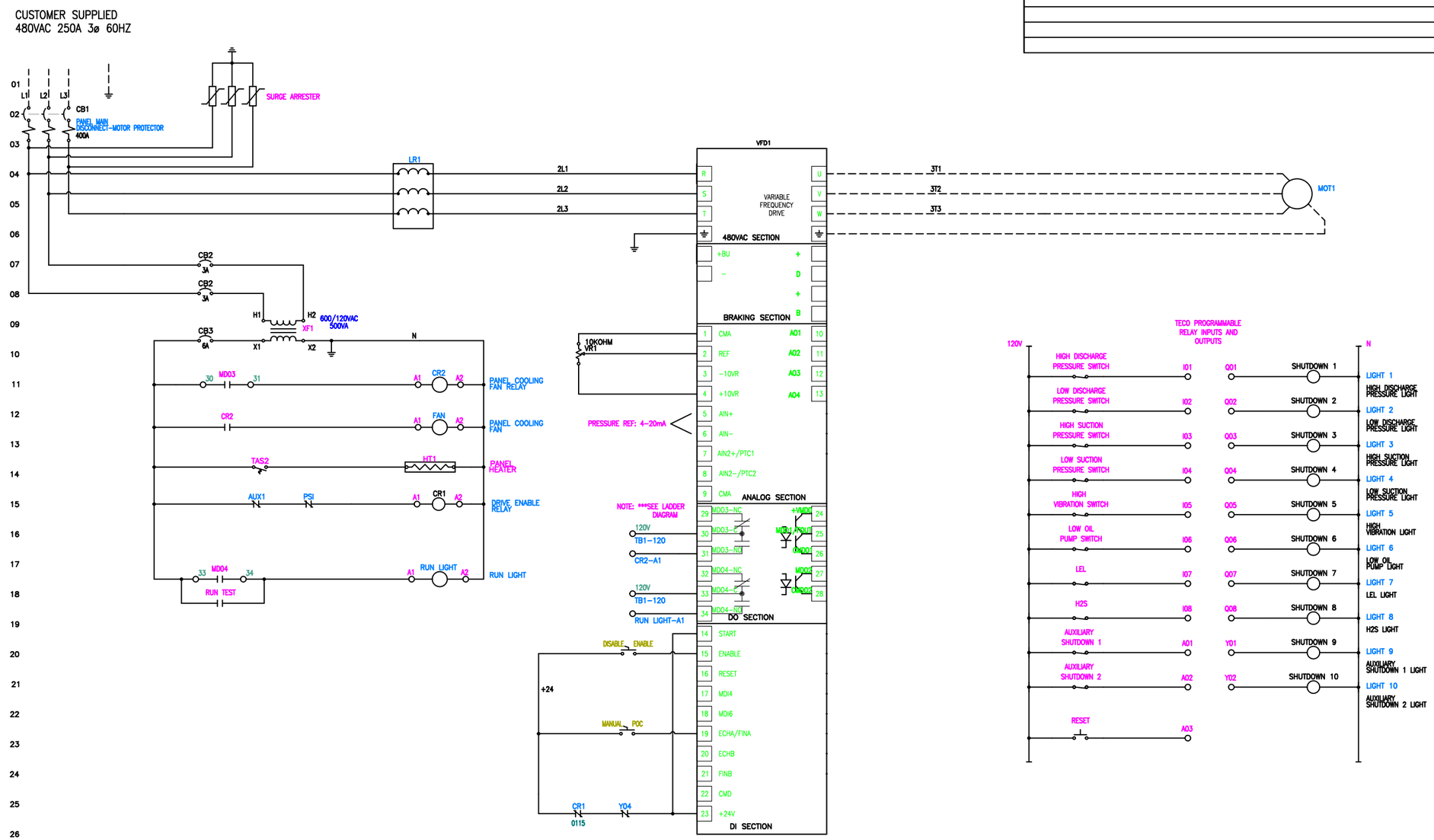

CCW INCORPORATED

SIZE	PART NO.	DWG NO.	REV
	150HP POWER1 WD	CCW-0024-0	0

SCALE: N/A	BY: CA	DATE: 20/12/2011	SHEET: 01