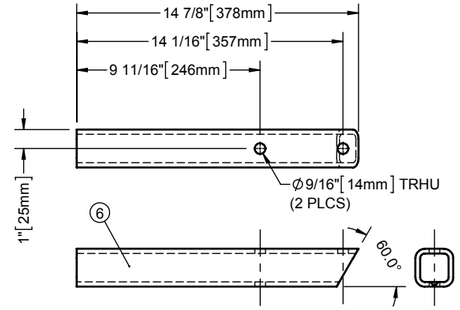

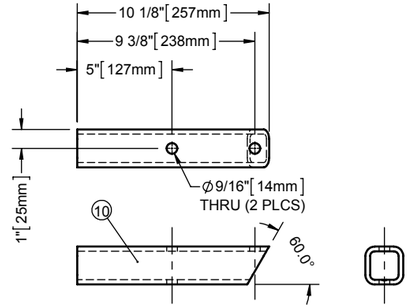

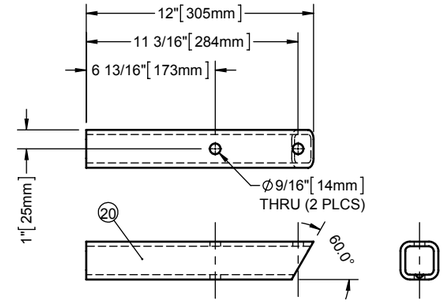

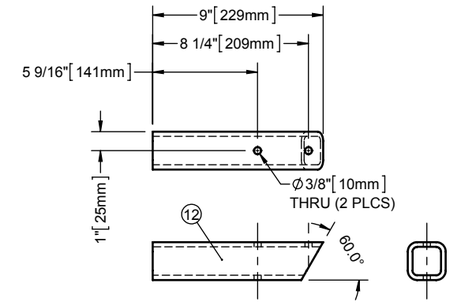

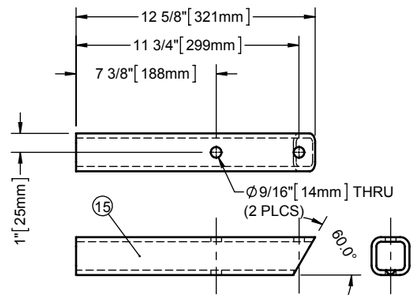

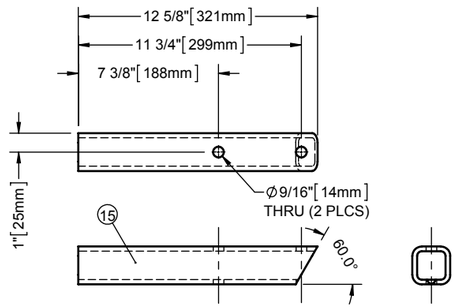

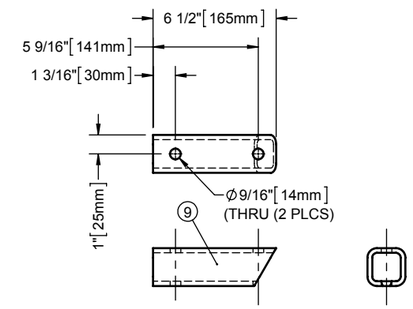

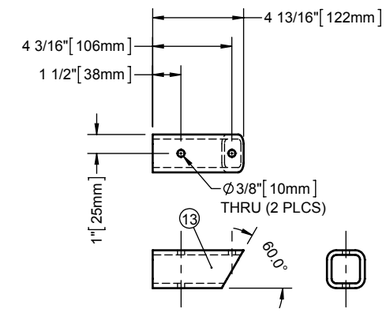

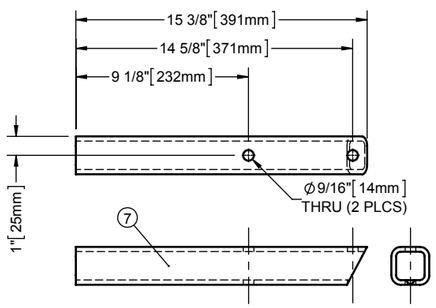

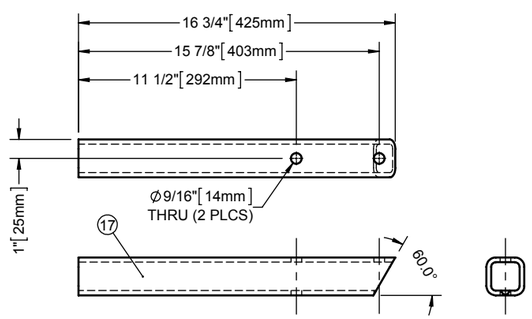

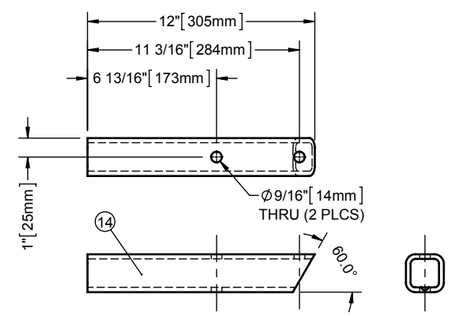

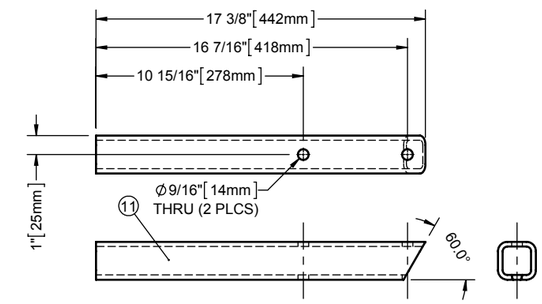

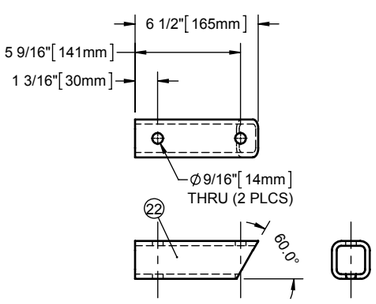

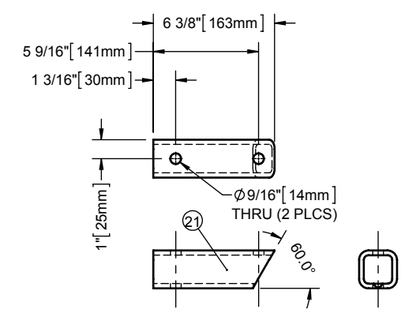

GENERAL NOTES:

1. GENERAL SHOP TOLERANCES ARE +/- 1/8"
2. ALL WELDING TO BE PERFORMED BY CWB CERTIFIED WELDERS ONLY.

REVISIONS

REV	DESCRIPTION	DATE	BY	CHK	ENG	SHOP	QCI	PM
A	ISSUED FOR APPROVAL	14JUL14	JP	SL	LF			AW

TOLERANCES (UNLESS OTHERWISE STATED) REFER TO ASME B16

FABRICATION TOLERANCES ± 1/8" [3.2]
ANGLES ± 1°

MACHINING TOLERANCES
.X ± 0.1" ±[2.5]
.XX ± 0.01" ±[0.25]
.XXX ± 0.005" ±[0.13]
ANGLES - ±0.5° or ±0'00"30s

THREADS: EXTERNAL-CLASS 2A
INTERNAL-CLASS 2B
FLATNESS &/OR STRAIGHTNESS:
0.005/IN [0.13/25.4]

THIRD ANGLE PROJECTION

UNLESS OTHERWISE SPECIFIED

DIMENSIONS ARE IN INCHES
ALL DIMENSIONS IN [ ] ARE mm

DO NOT SCALE DRAWING

DIMENSIONS AND TOLERANCING PER ANSI Y14.5M-1994

IF IN DOUBT - ASK

westpower

APEGGA PERMIT TO PRACTICE No: P07612 **ABSA AUTH. No: AQP21428**

THIS DRAWING CONTAINS CONFIDENTIAL AND PROPRIETARY INFORMATION, AND IS NOT TO BE REPRODUCED, DISTRIBUTED, OR TRANSMITTED IN ANY FORM WITHOUT EXPRESS WRITTEN PERMISSION FROM WESTPOWER. THIS DRAWING IS THE PROPERTY OF WESTPOWER AND SHALL BE RETURNED UPON REQUEST. ALL PATENTS, AND COPYRIGHTS RESERVED.

MODELED: JP	DATE: 20MAY14	**CRANE GENERAL ASSY.**	
DRAWN: JP	DATE: 10JUL14	CLIENT:	PROGRESS ENERGY CANADA LTD.
CHECKED: SL	DATE: 10JUL14	CONSUL:	KEYWEST PROJECTS LTD.
APPROVED: AW	DATE: 11JUL14	TITLE:	CARIBOU REFRIGERATION PLANT - CRANE ASSEMBLY DRAWING
REF No: -			
TAG No: P1378		PO No.: PG093-004-PO-21-07	LOCATION: C-16-F/94-G-7
SCALE.: NTS	CALC. WEIGHT: 3818.7 lbs.	DWG No.: **P1378-353**	REV: **0**